# P26-6S_50Hz

## Output Ratings

| Voltage, Frequency | | Prime | Standby |
|---|---|---|---|
| 230 V, 50 Hz | kVA | 24 | 26 |
| | kW | 24 | 26 |
| | kVA | | |
| | kW | | |

Ratings at 1 power factor.
Please refer to the output ratings technical data section for specific generator set outputs per voltage.

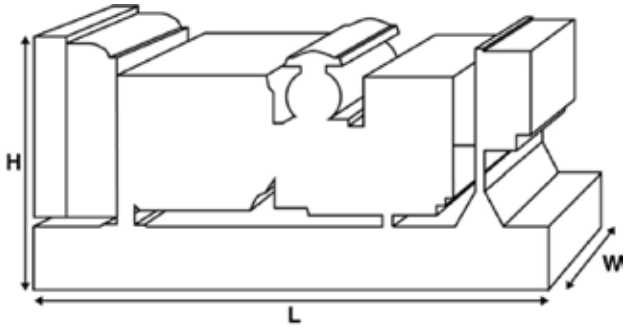


## Dimensions and Weights

| | | |
|---|---|---|
| Length | mm | 1570 (61.8) |
| Width | mm | 760 (29.9) |
| Height | mm | 1231 (48.5) |
| Weight (Dry) | kg | 695 (1532) |
| Weight (Wet) | kg | 708 (1561) |

Ratings in accordance with ISO 8528, ISO 3046, IEC 60034, BS5000 and NEMA MG-1.22.
Generator set pictured may include optional accessories.

### Prime Rating

These ratings are applicable for supplying continuous electrical power (at variable load) in lieu of commercially purchased power. There is no limitation to the annual hours of operation and this model can supply 10% overload power for 1 hour in 12 hours.

### Standby Rating

These ratings are applicable for supplying continuous electrical power (at variable load) in the event of a utility power failure. No overload is permitted on these ratings. The alternator on this model is peak continuous rated (as defined in ISO 8528-3).

### Standard Reference Conditions

Note: Standard reference conditions 25°C (77°F) Air Inlet Temp, 100m (328 ft) A.S.L. 30% relative humidity.
Fuel consumption data at full load with diesel fuel with specific gravity of 0.85 and conforming to BS2869: 1998, Class A2.

FG Wilson offer a range of optional features to allow you to tailor our generator sets to meet your power needs.
Options available include:

- Upgrade to CE Certification
- A wide range of Sound Attenuated Enclosures
- A variety of generator set control and synchronising panels
- Additional alarms and shutdowns
- A selection of exhaust silencer noise levels

For further information on all of the standard and optional features accompanying this product please contact your local Dealer or visit:

www.fgwilson.com

# P26-6S_50Hz

## Ratings and Performance Data

| | | | |
|---|---|---|---|
| Engine Make | | Perkins | |
| Engine Model: | | 1103D-33G3 | |
| Alternator Make | | FG Wilson | |
| Alternator Model: | | FGL20050-M | |
| Control Panel: | | FG100 | |
| Base Frame: | | Heavy Duty Fabricated Steel | |
| Circuit Breaker Type: | | 3 Pole MCCB | |
| Frequency: | | 50 HZ | 60 HZ |
| Engine Speed: RPM | rpm | 1500 | |
| Fuel Tank Capacity: | litres (US gal) | 71 (18.76) | |
| Fuel Consumption Prime | litres (US gal)/hr | 7.3 (1.9) | |
| Fuel Consumption Standby | litres (US gal)/hr | 7.8 (2.1) | |

## Engine Technical Data

| | | |
|---|---|---|
| No. of Cylinders | | 3 |
| Alignment | | IN LINE |
| Cycle | | 4 STROKE |
| Bore | mm (in) | 105 (4.1) |
| Stroke | mm (in) | 127 (5) |
| Induction | | NATURALLY ASPIRATED |
| Cooling Method | | WATER |
| Governing Type | | MECHANICAL |
| Governing Class | | ISO 8528 G2 |
| Compression Ratio | | 19.25:1 |
| Displacement | L (cu. in) | 3.3 (201.4) |
| Moment of Inertia: | kg $m^2$ (lb/$in^2$) | 1.14 (3896) |
| Voltage | | 12 |
| Ground | | Negative |
| Battery Charger Amps | | 65 |
| Engine Weight Dry | kg (lb) | 329 (725) |
| Engine Weight Wet | kg (lb) | 348 (767) |

| Engine Performance Data | | 50 Hz | 60 Hz |
|---|---|---|---|
| Engine Speed | rpm | 1500 | |
| Gross Engine Power Prime | kW (hp) | 29.7 (40) | |
| Gross Engine Power Standby | kW (hp) | 33 (44) | |
| BMEP Prime | kPa (psi) | 1023 (104.5) | |
| BMEP Standby | kPa (psi) | 1128 (116.1) | |

# P26-6S_50Hz

## Fuel System

| | | | | | |
|---|---|---|---|---|---|
| Fuel Filter Type: | | | Replaceable Element | | |
| Recommended Fuel: | | | Class A2 Diesel | | |
| Fuel Consumption at | | 110 % Load | 100 % Load | 75 % Load | 50 % Load |
| 50 Hz Prime: | l/hr (US gal/hr) | 7.8 (2.1) | 7.3 (1.9) | 5.6 (1.5) | 4 (1.1) |
| 50 Hz Standby | l/hr (US gal/hr) | - | 7.8 (2.1) | 6 (1.6) | 4.2 (1.1) |
| 60 Hz Prime | l/hr (US gal/hr) | | | | |
| 60 Hz Standby | l/hr (US gal/hr) | - | | | |

(Based on diesel fuel with a specific gravity of 0.84 and conforming to BS2869 classA2,EN590

## Air System

| | | 50 Hz | 60 Hz |
|---|---|---|---|
| Air Filter Type: | | Replaceable Element | |
| Combustion Air Flow Prime | $m^3$/min (cfm) | 2.1 (75) | |
| Combustion Air Flow Standby | $m^3$/min (cfm) | 2.2 (76) | |
| Max. Combustion Air Intake Restriction | kPa | 6.6 (26.5) | |

## Cooling System

| | | 50 Hz | 60 Hz |
|---|---|---|---|
| Cooling System Capacity | l (US gal) | 10.2 (2.7) | |
| Water Pump Type: | | Centrifugal | |
| Heat Rejected to Water & Lube Oil: Prime | kW (Btu/min) | 21.3 (1211) | |
| Heat Rejected to Water & Lube Oil: Standby | kW (Btu/min) | 23.9 (1359) | |
| Heat Radiation to Room*: Prime | kW (Btu/min) | 7 (398) | |
| Heat Radiation to Room*: Standby | kW (Btu/min) | 7.7 (438) | |
| Radiator Fan Load: | kW (hp) | 0.3 (0.4) | |
| Radiator Cooling Airflow: | $m^3$/min (cfm) | 58.2 (2055) | |
| External Restriction to Cooling Airflow: | Pa (in H2O) | 125 (0.5) | |

*: Heat radiated from engine and alternator
Designed to operate in ambient conditions up to 50°C (122°F).
Contact your local FG Wilson Dealer for power ratings at specific site conditions.

## Lubrication System

| | | |
|---|---|---|
| Oil Filter Type: | | Spin-On, Full Flow |
| Total Oil Capacity: | l (US gal) | 8.3 (2.2) |
| Oil Pan Capacity: | l (US gal) | 7.8 (2.1) |
| Oil Type: | | API CG4 / CH4 15W-40 |
| Oil Cooling Method: | | WATER |

## Exhaust System

| | | 50 Hz | 60 Hz |
|---|---|---|---|
| Maximum Allowable Back Pressure: | kPa (in Hg) | 15 (4.4) | |
| Exhaust Gas Flow: Prime | $m^3$/min (cfm) | 5.3 (185) | |
| Exhaust Gas Flow: Standby | $m^3$/min (cfm) | 5.5 (194) | |
| Exhaust Gas Temperature: Prime | °C (°F) | 515 (959) | |
| Exhaust Gas Temperature: Standby | °C (°F) | 570 (1058) | |

# P26-6S_50Hz

## Alternator Physical Data

| | |
|---|---|
| No. of Bearings: | 1 |
| Insulation Class: | H |
| Winding Pitch: | 2/3 |
| Winding Code | M |
| Wires: | 3 |
| Ingress Protection Rating: | IP23 |
| Excitation System: | SHUNT |
| AVR Model: | R121 |

* dependant on voltage code selected

## Alternator Operating Data

| | | |
|---|---|---|
| Overspeed: rpm | | 2250 |
| Voltage Regulation: (Steady state) | % | +/- 1.0 |
| Wave Form NEMA = TIF: | | 100 |
| Wave Form IEC = THF: | % | 2 |
| Total Harmonic content LL/LN: | % | 3.5 |
| Radio Interference: | | EN61000-6 |
| Radiant Heat: 50 Hz | kW (Btu/min) | 2.7 (154) |
| Radiant Heat: 60 Hz | kW (Btu/min) | 0 () |

## Alternator Performance Data 50 Hz:

| Voltage Code | | | 240 V | 230 V | 220 V | |
|---|---|---|---|---|---|---|
| Motor Starting Capability* | kVA | | 59 | 56 | 54 | |
| Short Circuit Capacity** | % | | 270 | 270 | 270 | 270 |
| Reactances | Xd | | 1.496 | 1.629 | 1.78 | |
| | X'd | | 0.165 | 0.18 | 0.196 | |
| | X"d | | 0.09 | 0.09 | 0.098 | |

## Alternator Performance Data 60 Hz

| Voltage Code | | | | | | |
|---|---|---|---|---|---|---|
| Motor Starting Capability* | kVA | | 0 | 0 | 0 | |
| Short Circuit Capacity** | % | 270 | 270 | 270 | 270 | 270 |
| Reactances | Xd | | 0 | 0 | 0 | |
| | X'd | | 0 | 0 | 0 | |
| | X"d | | 0 | 0 | 0 | |

Reactances shown are applicable to prime ratings.

*Based on 30% voltage dip at 0.9 power factor.

** With optional independant excitation system (PMG / AUX winding)

# P26-6S_50Hz

## Output Ratings 50 Hz

| | Prime | | Standby | |
|---|---|---|---|---|
| Voltage Code | kVA | kW | kVA | kW |
| 415/240V | | | | |
| 400/230V | | | | |
| 380/220V | | | | |
| 230/115V | | | | |
| 220/127V | | | | |
| 220/110V | | | | |
| 200/115V | | | | |
| 240V | 24 | 24 | 26 | 26 |
| 230V | 24 | 24 | 26 | 26 |
| 220V | 24 | 24 | 26 | 26 |

## Output Ratings 60 Hz

| | Prime | | Standby | |
|---|---|---|---|---|
| Voltage Code | kVA | kW | kVA | kW |
| 480/277V | | | | |
| 440/254V | | | | |
| 416/240V | | | | |
| 400/230V | | | | |
| 380/220V | | | | |
| 240/139V | | | | |
| 240/120V | | | | |
| 230/115V | | | | |
| 220/127V | | | | |
| 220/110V | | | | |
| 208/120V | | | | |
| 240/120 | | | | |
| 220/110 | | | | |

# P26-6S_50Hz

## Dealer Contact Details


STUART GROUP LTD

01953 454540

enquiries@stuartgroup.info

www.stuartgroup.co.uk

Stuart House, Hargham Road, Shropham, Norfolk, NR17 1DT


### Documentation

Operation and maintenance manual including circuit wiring diagrams.

### Generator Set Standards

The equipment meets the following standards: BS5000, ISO 8528, ISO 3046, IEC 60034, NEMA MG-1.22.

### Warranty

6.8 – 750 kVA electric power generation products in prime applications the warranty period is 12 months from date of start-up, unlimited hours (8760). For standby applications the warranty period is 24 months from date of start-up, limited to 500 hours per year.

730 – 2500 kVA electric power generation products in prime applications the warranty period is 12 months from date of start-up, unlimited hours (8760 hours) or 24 months from date of start-up, limited to 6000 hours. For standby applications the warranty period is 36 months from date of start-up, limited to 500 hours per year.

FG Wilson manufactures product in the following locations:
Northern Ireland • Brazil • China • India
With headquarters in Northern Ireland, FG Wilson operates through a Global Dealer Network.
To contact your local Sales Office please visit the FG Wilson website at www.fgwilson.com.

FG Wilson is a trading name of Caterpillar (NI) Limited.


In line with our policy of continuous product development, we reserve the right to change specification without notice.