P250-5

Standard Alternator

Output Ratings

Voltage, Frequency		Prime	Standby
400/230 V, 50 Hz	kVA	230	250
	kW	184	200
	kVA		
	kW		

Ratings at 0.8 power factor.
Please refer to the output ratings technical data section for specific generator set outputs per voltage.

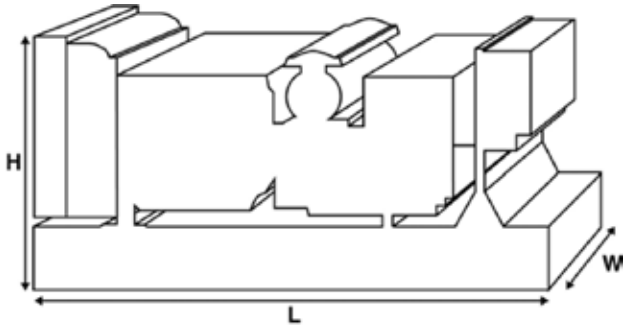

Dimensions and Weights

Length	mm	2662 (104.8)
Width	mm	1071 (42.2)
Height	mm	1818 (71.6)
Weight (Dry)	kg	2035 (4486)
Weight (Wet)	kg	2068 (4559)

Ratings in accordance with ISO 8528, ISO 3046, IEC 60034, BS5000 and NEMA MG-1.22.
Generator set pictured may include optional accessories.

Prime Rating

These ratings are applicable for supplying continuous electrical power (at variable load) in lieu of commercially purchased power. There is no limitation to the annual hours of operation and this model can supply 10% overload power for 1 hour in 12 hours.

Standby Rating

These ratings are applicable for supplying continuous electrical power (at variable load) in the event of a utility power failure. No overload is permitted on these ratings. The alternator on this model is peak continuous rated (as defined in ISO 8528-3).

Standard Reference Conditions

Note: Standard reference conditions 25°C (77°F) Air Inlet Temp, 100m (328 ft) A.S.L. 30% relative humidity.
Fuel consumption data at full load with diesel fuel with specific gravity of 0.85 and conforming to BS2869: 1998, Class A2.

FG Wilson offer a range of optional features to allow you to tailor our generator sets to meet your power needs.
Options available include:

- Upgrade to CE Certification
- A wide range of Sound Attenuated Enclosures
- A variety of generator set control and synchronising panels
- Additional alarms and shutdowns
- A selection of exhaust silencer noise levels

For further information on all of the standard and optional features accompanying this product please contact your local Dealer or visit:

www.fgwilson.com

P250-5

Ratings and Performance Data

Engine Make		Perkins	
Engine Model:		1506A-E88TAG2	
Alternator Make		Leroy Somer	
Alternator Model:		LL5114H	
Control Panel:		DSE7410	
Base Frame:		Heavy Duty Fabricated Steel	
Circuit Breaker Type:		3 Pole MCCB	
Frequency:		50 HZ	60 HZ
Engine Speed: RPM	rpm	1500	
Fuel Tank Capacity:	litres (US gal)	528 (139.48)	
Fuel Consumption Prime	litres (US gal)/hr	47.2 (12.5)	
Fuel Consumption Standby	litres (US gal)/hr	50.7 (13.4)	

Engine Technical Data

No. of Cylinders		6
Alignment		IN LINE
Cycle		4 STROKE
Bore	mm (in)	112 (4.4)
Stroke	mm (in)	149 (5.9)
Induction		TURBOCHARGED AIR TO AIR CHARGE COOLED
Cooling Method		WATER
Governing Type		ELECTRONIC
Governing Class		ISO 8528 G2
Compression Ratio		16.1:1
Displacement	L (cu. in)	8.8 (537)
Moment of Inertia:	kg m^2 (lb/in^2)	2.4031 (8212)
Voltage		24
Ground		Negative
Battery Charger Amps		45
Engine Weight Dry	kg (lb)	778 (1715)
Engine Weight Wet	kg (lb)	800 (1764)

Engine Performance Data		50 Hz	60 Hz
Engine Speed	rpm	1500	
Gross Engine Power Prime	kW (hp)	213 (286)	
Gross Engine Power Standby	kW (hp)	236 (316)	
BMEP Prime	kPa (psi)	1935 (280.6)	
BMEP Standby	kPa (psi)	2144 (310.9)	

P250-5

Fuel System

Fuel Filter Type:			Replaceable Element		
Recommended Fuel:			Class A2 Diesel		
Fuel Consumption at		110 % Load	100 % Load	75 % Load	50 % Load
50 Hz Prime:	l/hr (US gal/hr)	50.7 (13.4)	47.2 (12.5)	36.4 (9.6)	24.5 (6.5)
50 Hz Standby	l/hr (US gal/hr)	-	50.7 (13.4)	39.3 (10.4)	26.6 (7)
60 Hz Prime	l/hr (US gal/hr)				
60 Hz Standby	l/hr (US gal/hr)	-			

(Based on diesel fuel with a specific gravity of 0.85 and conforming to BS2869, class A2

Air System		50 Hz	60 Hz
Air Filter Type:		Paper Element	
Combustion Air Flow Prime	m^3/min (cfm)	14.4 (509)	
Combustion Air Flow Standby	m^3/min (cfm)	15 (530)	
Max. Combustion Air Intake Restriction	kPa	6.2 (24.9)	

Cooling System		50 Hz	60 Hz
Cooling System Capacity	l (US gal)	30.7 (8.1)	
Water Pump Type:		Centrifugal	
Heat Rejected to Water & Lube Oil: Prime	kW (Btu/min)	93 (5289)	
Heat Rejected to Water & Lube Oil: Standby	kW (Btu/min)	99 (5630)	
Heat Radiation to Room*: Prime	kW (Btu/min)	29 (1649)	
Heat Radiation to Room*: Standby	kW (Btu/min)	30.3 (1723)	
Radiator Fan Load:	kW (hp)	7.7 (10.3)	
Radiator Cooling Airflow:	m^3/min (cfm)	329.1 (11624)	
External Restriction to Cooling Airflow:	Pa (in H2O)	125 (0.5)	

*: Heat radiated from engine and alternator
Designed to operate in ambient conditions up to 50°C (122°F).
Contact your local FG Wilson Dealer for power ratings at specific site conditions.

Lubrication System

Oil Filter Type:		Spin-on, Full flow
Total Oil Capacity:	l (US gal)	39 (10.3)
Oil Pan Capacity:	l (US gal)	36 (9.5)
Oil Type:		API CI-4 0W-30
Oil Cooling Method:		WATER

Exhaust System		50 Hz	60 Hz
Maximum Allowable Back Pressure:	kPa (in Hg)	10 (3)	
Exhaust Gas Flow: Prime	m^3/min (cfm)	34.4 (1215)	
Exhaust Gas Flow: Standby	m^3/min (cfm)	35.7 (1261)	
Exhaust Gas Temperature: Prime	°C (°F)	467 (873)	
Exhaust Gas Temperature: Standby	°C (°F)	475 (887)	

P250-5

Alternator Physical Data

No. of Bearings:	1
Insulation Class:	H
Winding Pitch:	2/3
Winding Code	6
Wires:	12
Ingress Protection Rating:	IP23
Excitation System:	SHUNT
AVR Model:	R250

* dependant on voltage code selected

Alternator Operating Data

Overspeed: rpm		2250
Voltage Regulation: (Steady state)	%	+/- 0.5
Wave Form NEMA = TIF:		50
Wave Form IEC = THF:	%	2
Total Harmonic content LL/LN:	%	2
Radio Interference:		EN61000-6
Radiant Heat: 50 Hz	kW (Btu/min)	16.3 (927)
Radiant Heat: 60 Hz	kW (Btu/min)	

Alternator Performance Data 50 Hz:

Voltage Code		415/240 V	400/230 V 230/115 V 230 V	380/220 V	
Motor Starting Capability*	kVA	563	532	491	
Short Circuit Capacity**	%	300	300	300	300
Reactances	Xd	3.517	3.786	4.195	
	X'd	0.244	0.262	0.291	
	X"d	0.155	0.155	0.172	

Alternator Performance Data 60 Hz

Voltage Code						
Motor Starting Capability*	kVA					
Short Circuit Capacity**	%	300	300	300	300	300
Reactances	Xd					
	X'd					
	X"d					

Reactances shown are applicable to prime ratings.

*Based on 30% voltage dip at 0.6 power factor.

** With optional independant excitation system (PMG / AUX winding)

P250-5

Output Ratings 50 Hz

	Prime		Standby	
Voltage Code	kVA	kW	kVA	kW
415/240V	230	184	250	200
400/230V	230	184	250	200
380/220V	230	184	250	200
230/115V	230	184	250	200
220/127V				
220/110V				
200/115V				
240V				
230V				
220V				

Output Ratings 60 Hz

	Prime		Standby	
Voltage Code	kVA	kW	kVA	kW
480/277V				
440/254V				
416/240V				
400/230V				
380/220V				
240/139V				
240/120V				
230/115V				
220/127V				
220/110V				
208/120V				
240/120				
220/110				

P250-5

Dealer Contact Details

STUART GROUP LTD

01953 454540

enquiries@stuartgroup.info

www.stuartgroup.co.uk

Stuart House, Hargham Road, Shropham, Norfolk, NR17 1DT

Documentation

Operation and maintenance manual including circuit wiring diagrams.

Generator Set Standards

The equipment meets the following standards: BS5000, ISO 8528, ISO 3046, IEC 60034, NEMA MG-1.22.

Warranty

The warranty for this product in prime applications is 12 months from date of start-up, unlimited hours (8760).
For standby applications the warranty period is 24 months from date of start-up, limited to 500 hours per year.

FG Wilson manufactures product in the following locations:
Northern Ireland • Brazil • China • India
With headquarters in Northern Ireland, FG Wilson operates through a Global Dealer Network.
To contact your local Sales Office please visit the FG Wilson website at www.fgwilson.com.

FG Wilson is a trading name of Caterpillar (NI) Limited.

In line with our policy of continuous product development, we reserve the right to change specification without notice.